KEY

Key - Lounge chair



TECHNICAL DETAILS

unibody	with fire-retardant, CFC-free cold-moulded polyurethane foam padding, with steel insert. Finished with horizontal stitching. The unibody is tilted 6° backwards.
ottoman	beech plywood structure with flexible, non-deformable, fire-retardant, CFC-free polyurethane padding.
armrests	in cold-foamed polyurethane, completely upholstered. in aluminium with upholstered elbow-rests in the same colour as the seat.
unibody device	tilting device with automatic return that allows slight tilting of the unibody (tilt angles 7° backward, 4° forward) and 180° right – 180° left rotation. 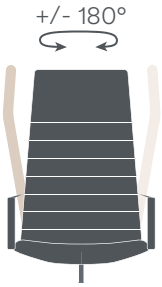
ottoman device	3D device with gas lift. It allows a 3° front, side and rear tilt of the seat and an excursion of 7cm. 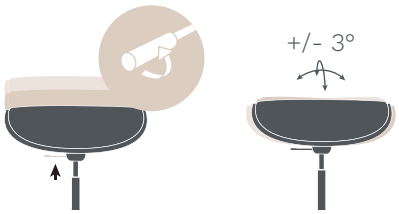 Right lever adjusts the height of the seat
base	4-star base in polished aluminium or black epoxy powder coating on glides (Ø 82 cm for Key Lounge, Ø 72 cm for Ottoman).
base finishes	Polished aluminium Black aluminium

fabrics

Cat.D

Skill (eco-leather)

PGM3 PGTR PGCD PGTA PGR1 PGCG PGBZ
PGGB PGVC PGM2 PGNE

Cat. F

Step

STX2 STZ9 STSB STE1 STBS STVU STE4
STE3 STE2 STNE

Chili

S0G6 S0G2 S0G3 S0M3 S0V2 S0R0 S0R4
S0RA S0R7 S0R2 S0B9 S0B8 S0V5 S0V6
S0V7 S0NE

Silvertex

SBR7 SBV1 SBR3 SBR4 SBR5 SBR6 SBB7
SBB3 SBB6 SBG1 SBBI SBM2 SBV4 SBV6
SBV3 SBG6

Valencia (eco-leather)

SWR6 SWBI SWV7 SWRA SWR8 SWR3 SWR2
SWB8 SWG4 SWB9 SWB2 SWM6 SWG0 SWG8
SWG7 SWG1

Jet

JTW2 JTW3 JTH2 JTGM JTYF JT1R JTRG
JTO1 JTR1 JTVM JT07 JTVI JTG3 JTV7
JTC1 JTV8 JTB3 JTZ6 JTM2 JTZ0

Magnum Bio Base (eco-leather)

T5G7 T5B0 T5B6 T5B2 T5B5 T5R4 T5R6
T5V3 T5G1 T5M6 T5M5 T5G4 T5M3 T5V8
T5NE

Connect

T6G0 T6G1 T6G2 T6R0 T6R1 T6R2 T6V5
T6V6 T6B6 T6NE

Rivet

T7B1 T7B4 T7B2 T7R6 T7R0 T7R1 T7R2
T7R3 T7V0 T7V5 T7V4 T7V3 T7G3 T7G1
T7G4 T7G7

Era

T8R0 T8R1 T8R2 T8R3 T8R9 T8V8 T8V2
T8V5 T8V6 T8V0 T8G1 T8G4 T8BA T8BB
T8G6 T8NE

Go Check

T9B7 T9B8 T9B9 T9R5 T9R6 T9R7 T9V0
T9V2 T9V3 T9G0 T9G2 T9G4

Cat. P

Leather

URBI URBE URBC URGR URGS URVS URMR
URMC UROC URYE UROR URRE URBS URVE
URNE

Cat. PX

Corrected grain leather

KTBI KTBE KTYE KTRO KTOC KTR4 KTRC
KTBX KTM1 KTM4 KTM2 KTVS KTG1 KTAZ
KTBL KTB4 KTGR KTG3 KTGS KTNE

ABACUS

High backrest.
Tilting device with automatic return.
Padded and upholstered armrests.

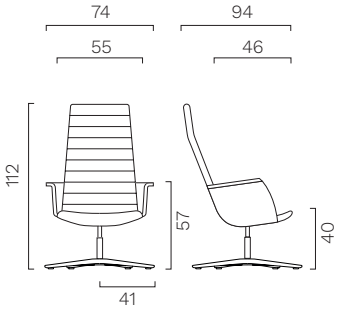

High backrest.
Tilting device with automatic return.
Padded and upholstered armrests.

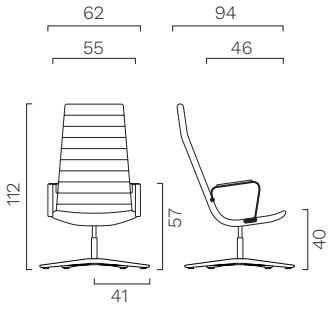

High backrest.
Tilting device with automatic return.
Without armrests.

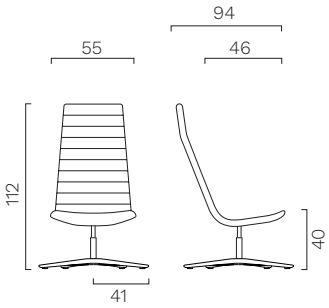

Ottoman

3D device with gas lift.

